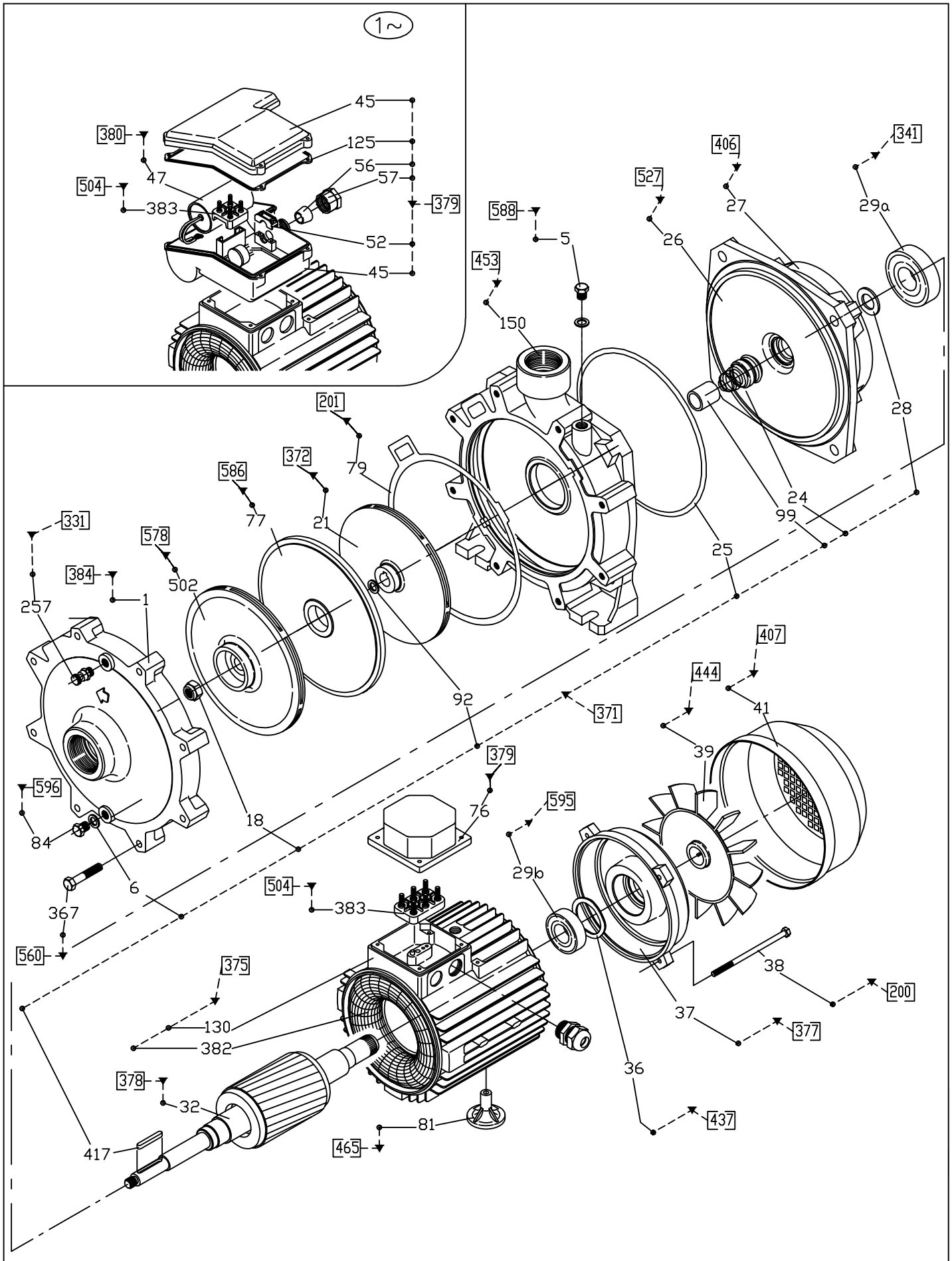


| | | | | |
|---|---|---|---|---|
| PENTAIR | Pentair Water Italy S.r.l.<br>Via Masaccio,13<br>56010 Lugnano (PI)<br>ITALY | Drawn<br>M.Di Nasso | Title<br>CB | Sheet<br>1 of 1 |
| | | Approved<br>M.Bernacca | Date (dd/mm/yy)<br>17/01/2023 | Dwg #<br>DR230002_00 |

This drawing is the absolute property of Pentair Water Italy S.r.l.. It may not be reproduced in any form without the written permission of Pentair Water Italy S.r.l..